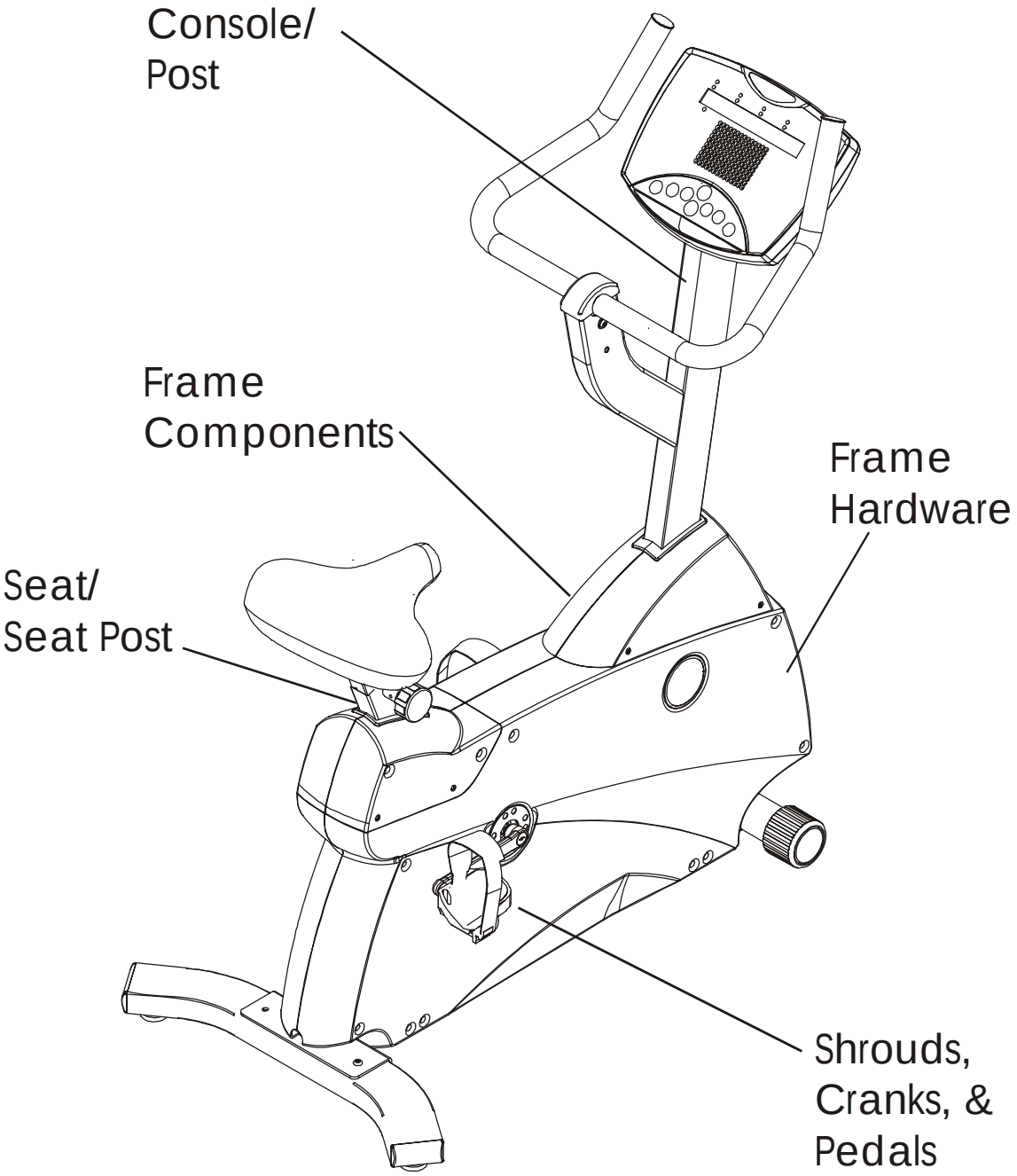

Example of a Starting Serial Number CU300060210000001			
CU300	06	0210	000001
Model #	Plant	Year/Month	Starting Serial Number

rev 01 Jul 2008

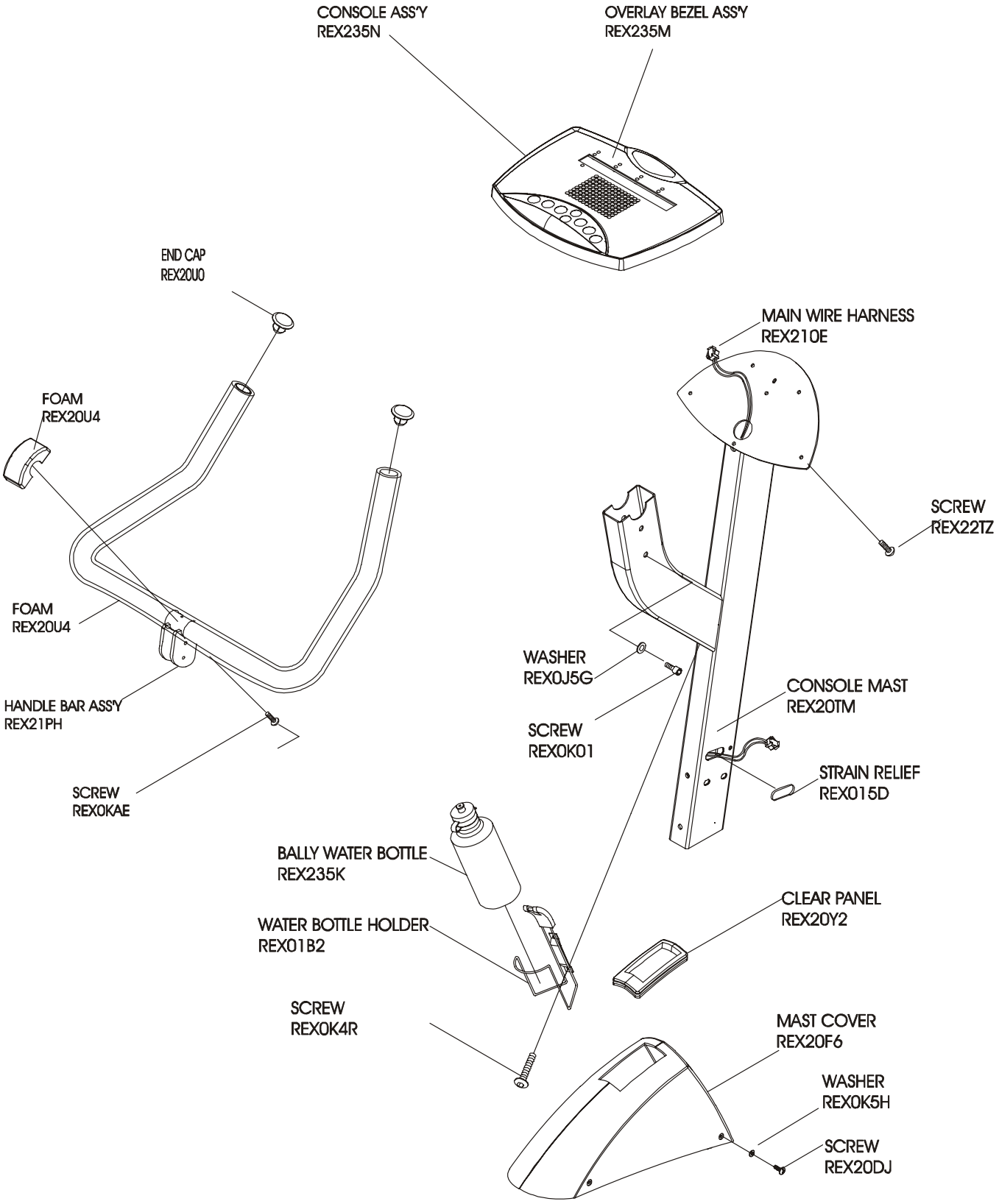
CONSOLE ASS'Y
REX235N
OVERLAY BEZEL ASS'Y
REX235M
END CAP
REX20U0
MAIN WIRE HARNESS
REX210E
FOAM
REX20U4
SCREW
REX22TZ
FOAM
REX20U4
WASHER
REX0J5G
CONSOLE MAST
REX20TM
HANDLE BAR ASS'Y
REX21PH
SCREW
REX0K01
STRAIN RELIEF
REX015D
SCREW
REX0KAE
BALLY WATER BOTTLE
REX235K
CLEAR PANEL
REX20Y2
WATER BOTTLE HOLDER
REX01B2
SCREW
REX0K4R
MAST COVER
REX20F6
WASHER
REX0K5H
SCREW
REX20DJ

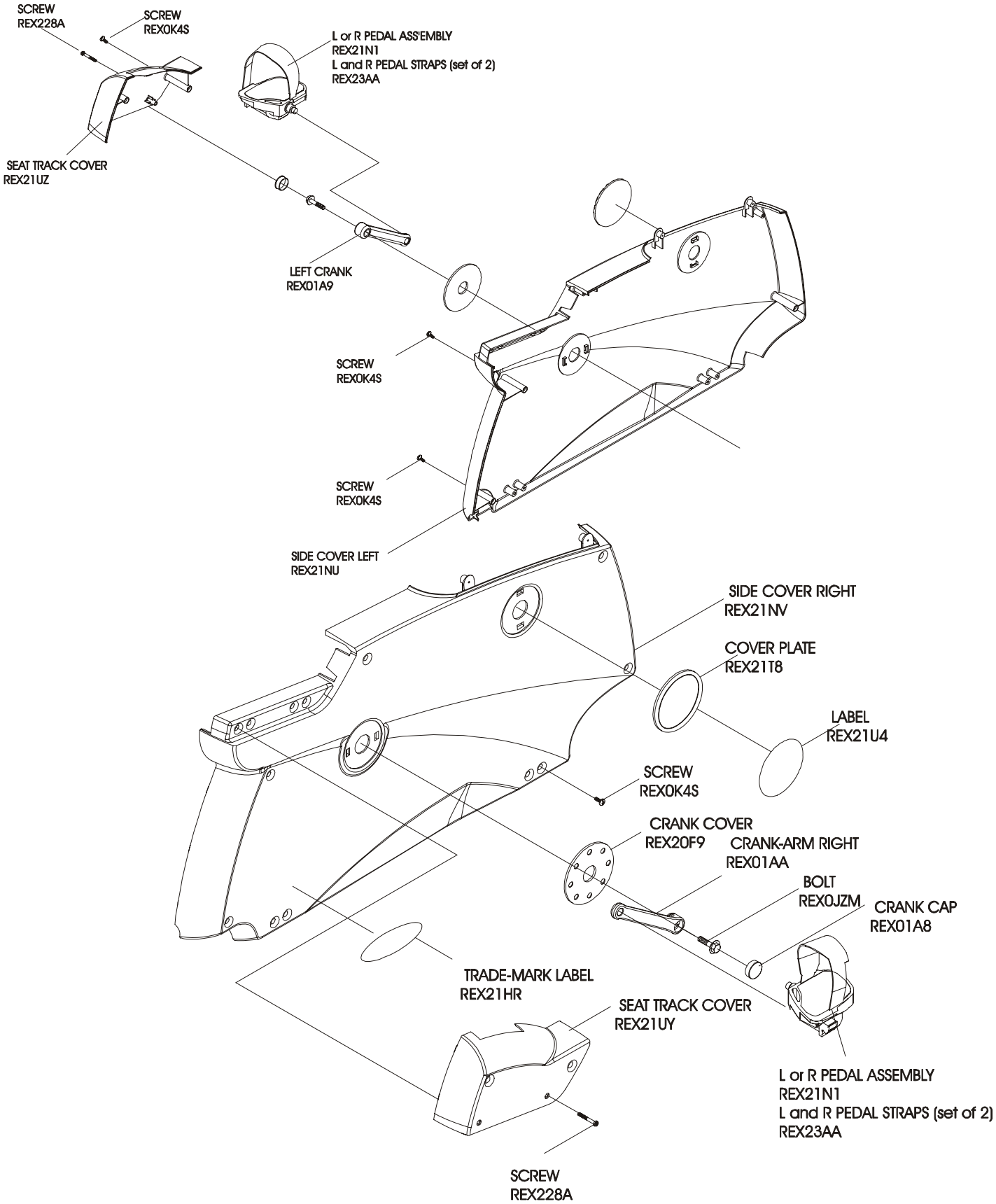
SCREW
REX228A
SCREW
REX0K4S
L or R PEDAL ASS'EMBLY
REX21N1
L and R PEDAL STRAPS (set of 2)
REX23AA
SEAT TRACK COVER
REX21UZ
LEFT CRANK
REX01A9
SCREW
REX0K4S
SCREW
REX0K4S
SIDE COVER LEFT
REX21NU
SIDE COVER RIGHT
REX21NV
COVER PLATE
REX21T8
LABEL
REX21U4
SCREW
REX0K4S
CRANK COVER
REX20F9
CRANK-ARM RIGHT
REX01AA
BOLT
REX0JZM
CRANK CAP
REX01A8
TRADE-MARK LABEL
REX21HR
SEAT TRACK COVER
REX21UY
L or R PEDAL ASSEMBLY
REX21N1
L and R PEDAL STRAPS (set of 2)
REX23AA
SCREW
REX228A

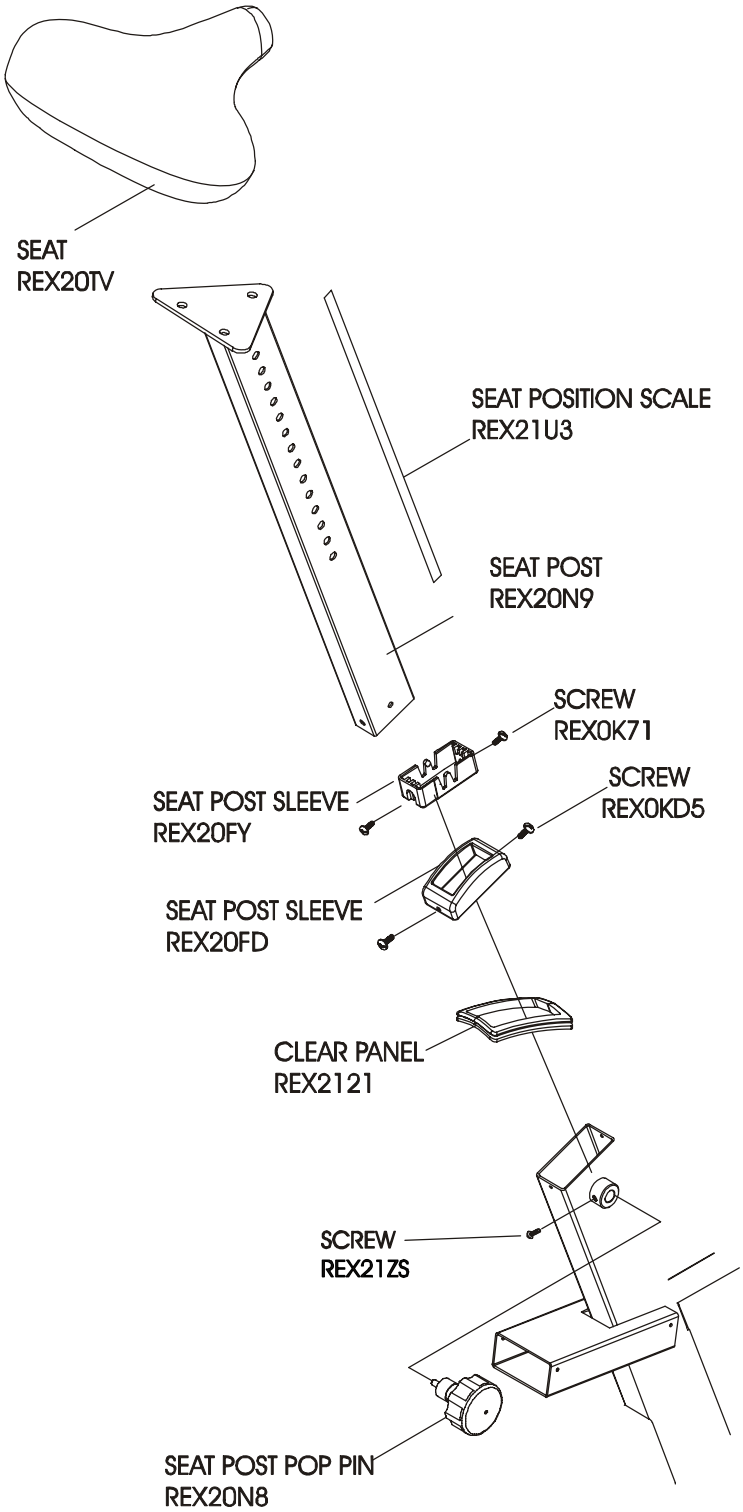
SEAT
REX20TV
SEAT POSITION SCALE
REX21U3
SEAT POST
REX20N9
SCREW
REX0K71
SEAT POST SLEEVE
REX20FY
SCREW
REX0KD5
SEAT POST SLEEVE
REX20FD
CLEAR PANEL
REX2121
SCREW
REX21ZS
SEAT POST POP PIN
REX20N8

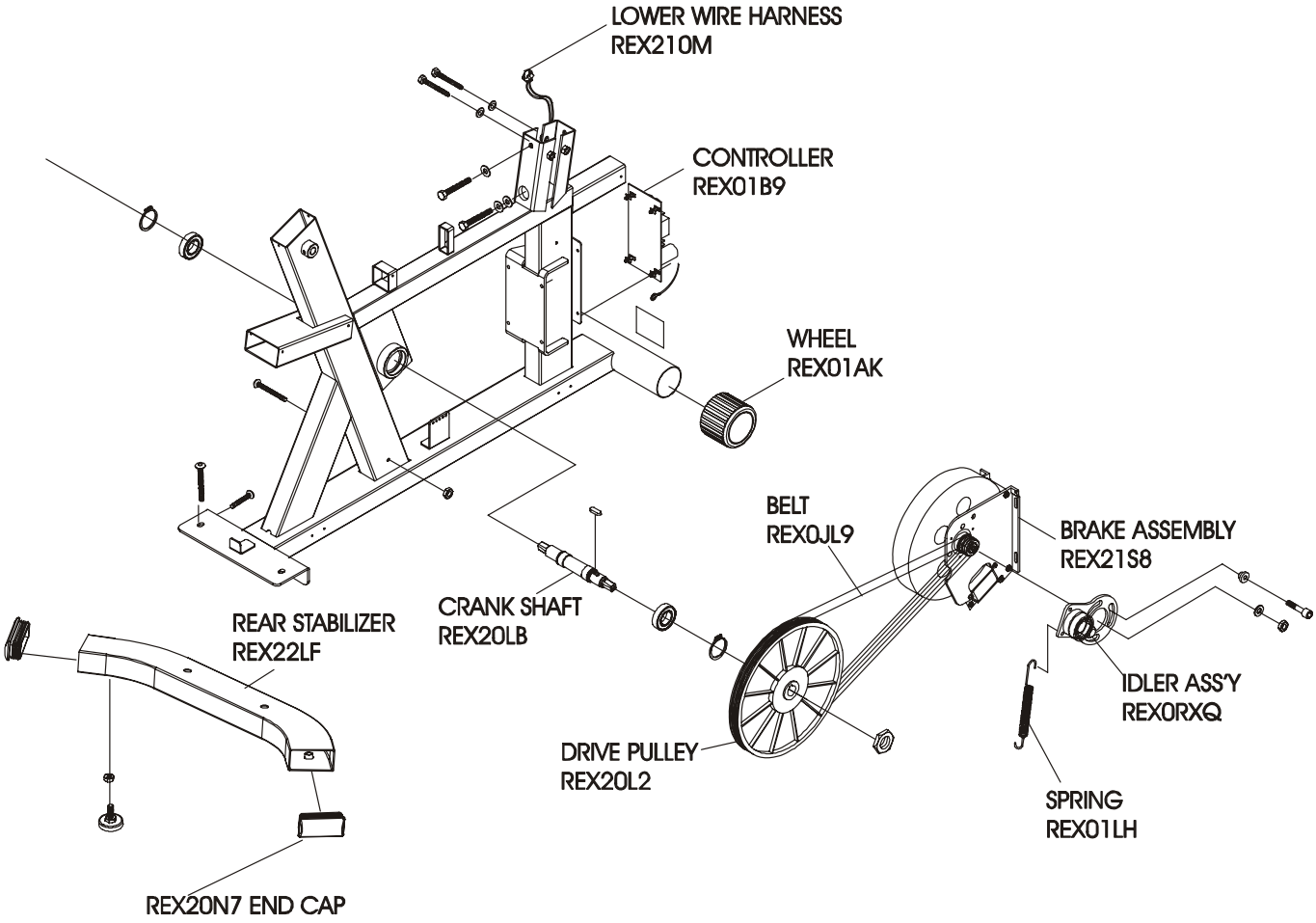
LOWER WIRE HARNESS
REX210M
CONTROLLER
REX01B9
WHEEL
REX01AK
BELT
REX0JL9
BRAKE ASSEMBLY
REX21S8
CRANK SHAFT
REX20LB
REAR STABILIZER
REX22LF
IDLER ASS'Y
REX0RXQ
DRIVE PULLEY
REX20L2
SPRING
REX01LH
REX20N7 END CAP

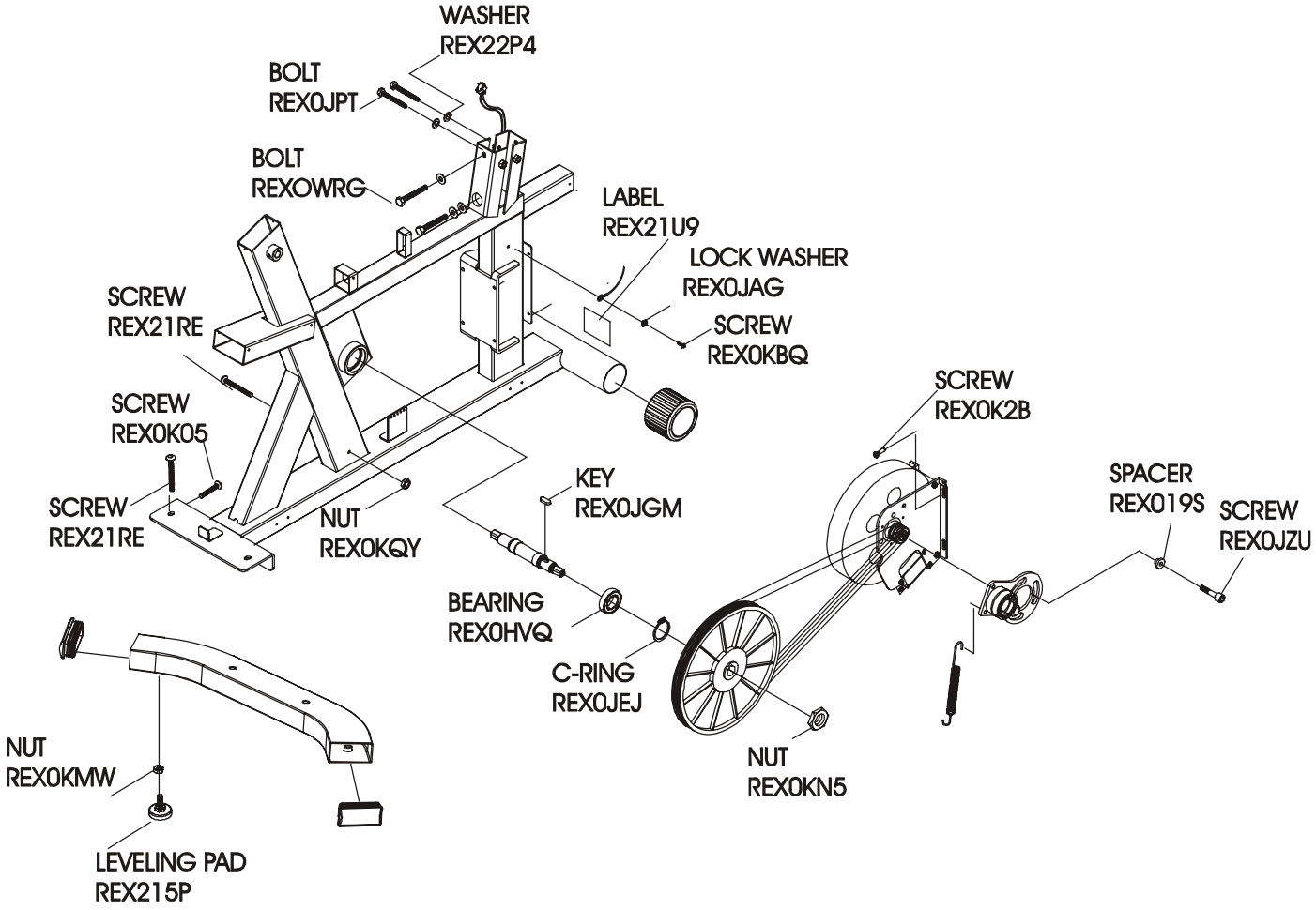
WASHER
REX22P4
BOLT
REX0JPT
BOLT
REX0WRG
LABEL
REX21U9
LOCK WASHER
REX0JAG
SCREW
REX0KBQ
SCREW
REX21RE
SCREW
REX0K05
SCREW
REX21RE
NUT
REX0KQY
KEY
REX0JGM
SCREW
REX0K2B
SPACER
REX019S
SCREW
REX0JZU
BEARING
REX0HVQ
C-RING
REX0JEJ
NUT
REX0KN5
NUT
REX0KMW
LEVELING PAD
REX215P